M-Zert
Zertifiziertes QM-System
DIN EN ISO 9001
Zertifikat-Nr. 01017

Electromagnetic Flow Meter

KOBOLD

measuring • monitoring • analysing

MIS

IO-Link

U-PACE

- Accuracy: <±(0.5% of reading +0.5% of full scale)
- Monitoring, transmitter function, dosing
- Bidirectional measuring
- p_{max}: 16 bar; t_{max}: 70 °C
- Connection flange 2", DN 50, 3", DN 80, 4", DN 100

S5

KOBOLD companies worldwide:
AUSTRALIA, AUSTRIA, BELGIUM, BULGARIA, CANADA, CHINA, CZECHIA, FRANCE, GERMANY, GREAT BRITAIN, HUNGARY, INDIA, INDONESIA, ITALY, MALAYSIA, MEXICO, NETHERLANDS, PERU, POLAND, REPUBLIC OF KOREA, SPAIN, SWITZERLAND, THAILAND, TUNISIA, TURKEY, USA, VIETNAM

KOBOLD Messring GmbH
Nordring 22-24
D-65719 Hofheim/Ts.
Head Office:
+49(0)6192 299-0
+49(0)6192 23398
info.de@kobold.com
www.kobold.com

Description

The new flow meter MIS was developed for measuring and monitoring medium-sized flow of conductive liquids in pipes.

The device operates according to the electromagnetic measurement principle. According to Faraday's Law of magnetic induction, a voltage is induced in a conductor moving through a magnetic field. The electrically conductive measuring agent acts as the moved conductor. The voltage induced in the measuring agent is proportional to the flow velocity and is therefore a value for the volumetric flow. The flowing media must have a minimum conductivity. The induced voltage is picked up by two sensing electrodes which are in contact with the measuring agent and sent to the measuring amplifier.

The flow rate will be calculated based on the cross sectional area of the pipe.

The measurement is not depending on the process liquid and its material properties such as density, viscosity and temperature. The units include a universal U-PACE electronics (Universal Precision and Control Electronics) which features two outputs arbitrarily configurable by the customer.

The U-PACE electronics offers various diagnostic functions and the following features:

- Flow- and temperature measurement
- Monitoring, dosing and transmitter function
- Dosing function with external control input
- Coloured, multi-parameter configurable TFT-display, rotatable in 90° steps
- Bidirectional measuring
- Intuitive setup menu via 4 optical touch keys
- 2 configurable outputs (pulse-/frequency-/alarm- and analogue output)
- Grand and resettable totaliser
- IO link function

Significant Characteristics

- Monitoring, dosing and transmitter function
- Dosing function with external control input
- Coloured, multi-parameter configurable TFT-display, rotatable in 90° steps
- Bidirectional measuring
- Intuitive setup menu via 4 optical touch keys
- 2 configurable outputs (pulse-/frequency-/alarm- and analogue output)
- Grand and resettable totaliser

Areas of Application

- Water tapping
- Water treatment
- Water distribution network (leakage detection management)
- Watering
- Waste water treatment
- Filtration systems (e.g. reverse osmosis and ultrafiltration)
- Industrial applications

Technical Details

Measurement process:	electromagnetic
Range:	see flow specific values
Media:	conductive fluids
Minimum conductivity:	≥20 µS/cm
Max. medium viscosity:	70 cP
Max. pressure:	16 bar
Accuracy:	<±(0.5% of reading + 0.5% of full scale)*
Repeatability:	±0.2% of full scale
Response time flow t_{90} (alarm output / pulse output):	<250 ms
Mounting position:	in all directions
In-/outlet:	5 x DN/3 x DN
Pressure drop (max. at 3 m/s):	25 mbar
Handling:	4 optical touch fields, useable with hand gloves
Housing:	aluminium, powder coated, display screen PMMA

Wetted parts

Connection:	steel ASTM A105, paint coated (Corrosivity category C4M)
Lining:	NBR (others on request)
Electrodes:	Hastelloy® C276
Protection:	IP 67
Media temperature:	-10 °C ... +70 °C
Ambient temperature:	-10 °C ... +60 °C

Electrical data

Supply voltage:	19 - 30 V_{DC}, internal power consumption max. 200 mA
Display:	TFT display, 128 x 128 pixels, 1.4" display orientation in 90° steps adjustable
Display repetition rate:	0.5 ... 10 s, adjustable
Pulse output	Push-Pull, freely scalable, configurable for partial and accumulated totaliser

* Under reference conditions: media temperature: 15 °C ... 30 °C, 1 cSt, 500 µS/cm, 1 bar
ambience temperature: 15 °C ... 30 °C

1/08 - 2024

Technical Details (continued)

Frequency output	Push-Pull, freely scalable, 2 kHz @ overflow f_{min} @ FS = 50 Hz f_{max} @ FS = 1000 Hz
Alarm output:	NPN, PNP, Push-Pull, configurable max. 30 V_{DC}, max. 200 mA short-circuit proof
Analogue output:	active, 3 wire, 0(4)-20 mA, max. load 500 Ω or 0(2)-10 V_{DC}, (R_i = 500 Ω) (factory calibrated with R_L = 1 MΩ)
Control input:	active signal U_{high} max. 30 V_{DC} 0 <Low <10 V_{DC} 15 V_{DC} <High <Vs
Dosing function:	Dosing output OUT2: Push-Pull, High active Control input OUT1: START/STOP 0,5 s <t_{high} <4 s RESET t_{high} >5 s
Electrical connection:	plug M12x1, 4-pin

Flow Specific Values

Size		Measuring range (m³/h)
DN	ASME	
40	1½"	0.2 ... 45
50	2"	0.3 ... 63
65	2½"	0.4 ... 100
80	3"	0.6 ... 160
100	4"	1.0 ... 250
125	5"	1.6 ... 400
150	6"	2.4 ... 600
200	8"	4.0 ... 1000

Configuration of outputs

Output 1 (OUT1, PIN 4)	Output 2 (OUT2, PIN 2)
Analogue output 4-20 mA	Analogue output 4-20 mA
Analogue output 0-20 mA	Analogue output 0-20 mA
Analogue output 2-10 V	Analogue output 2-10 V
Analogue output 0-10 V	Analogue output 0-10 V
Switching output NPN/PNP/PP	Switching output NPN/PNP/PP
Pulse output PP	Pulse output PP
Frequency output PP	Frequency output PP
Communication mode M12 COM	
Communication mode IO-Link	
Control input	
Control input dosing function	Dosing output

IO-Link specification

Manufacturer ID:	1105 (decimal), 0 x 0451 (hex)
Manufacturer name:	Kobold Messring GmbH
IO-Link specification:	V1.1
Bitrate:	COM3
Minimal cycle time:	1,1 ms
SIO-Mode:	yes (OUT1 in configuration IO-Link)
Block parameterisation:	yes
Operational readiness:	10 s
Max. cable length:	20 m

Electrical Connection MIS

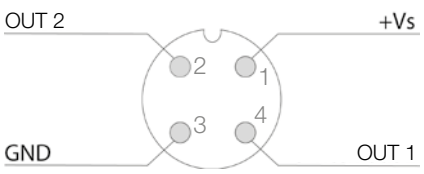

Order Details (Example: **MIS-H 330B1 HH 100**)

Model	Material lining	Flange type / size	Material process connection	Measuring and earthing electrodes	Transmitter mounting
MIS-	**H** = hard rubber **X**[1] = acc. to specification	**320B** = DN50 PN16 form A DIN EN 1092-1 **325B** = DN65 PN16 form A DIN EN 1092-1 **330B** = DN80 PN16 form A DIN EN 1092-1 **335B** = DN100 PN16 form A DIN EN 1092-1 **206R** = 2" Class 150 FF ASME B16.5-2003 **208R** = 3" Class 150 FF ASME B16.5-2003 **210R** = 4" Class 150 FF ASME B16.5-2003 **XXXX** = acc. to specification	**1** = steel, paint coated	**HH** = Hastelloy® **XX**[2] = acc. to specification	**100** = integrated

[1] Possible linings on request: EPDM (replace "X" with "E"), soft rubber (replace "X" with "W") and PTFE (replace "X" with "P")
[2] On request are following available: platinum, stainless steel, tantal, titanium

Dimensions [mm]

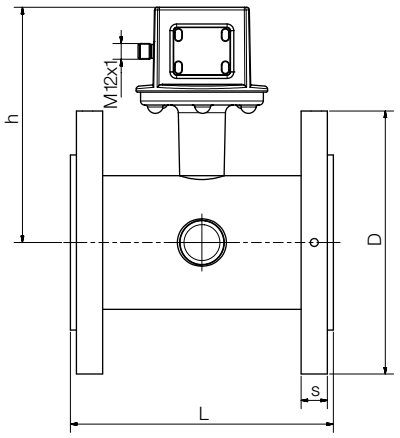

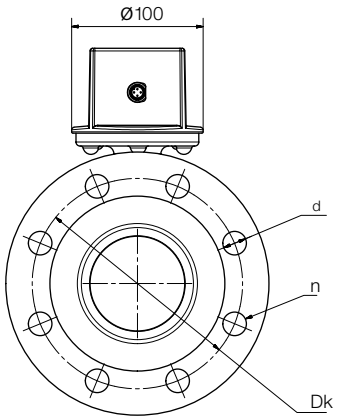

	Nominal diameter	h	L	D	s	Dk	d	n
DIN	DN 50	167	200	165	20	125	18	4
	DN 80	179	200	200	20	160	18	8
	DN 100	186	250	220	22	180	18	8
	DN 150	211	300	285	22	240	22	8
	DN 200	263	350	340	24	295	22	12
ASME	2"	167	200	150	21	120.6	19	4
	3"	179	200	190	26	152.4	19	4
	4"	186	250	230	27	190.5	19	8
	6"	211	300	279	31	241.3	22.2	8
	8"	263	350	343	34	298.4	22.2	8

Weight

Nominal size		Pressure rating	NBR lining
[mm]	[Inch]		Weight [kg]
50	2	PN16 / Cl. 150	9.4
80	3	PN16 / Cl. 150	12
100	4	PN16 / Cl. 150	15.6
150	6	PN16 / Cl. 150	26.4
200	8	PN16 / Cl. 150	48.4

1/08 - 2024

Measuring Mode, Display Layout »Single« configurable

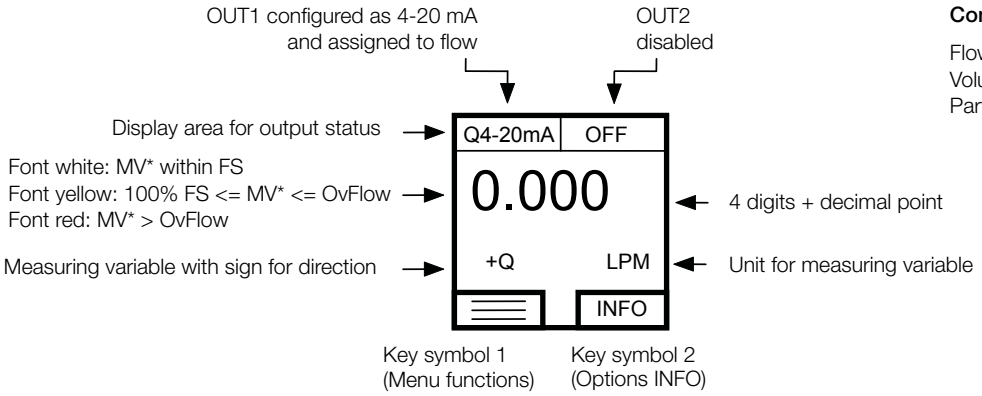

Configurable variables

Flow rate	Q
Volume	AC
Part Volume	PT

* Measured Value

Measuring Mode, Display Layout »Dual« configurable

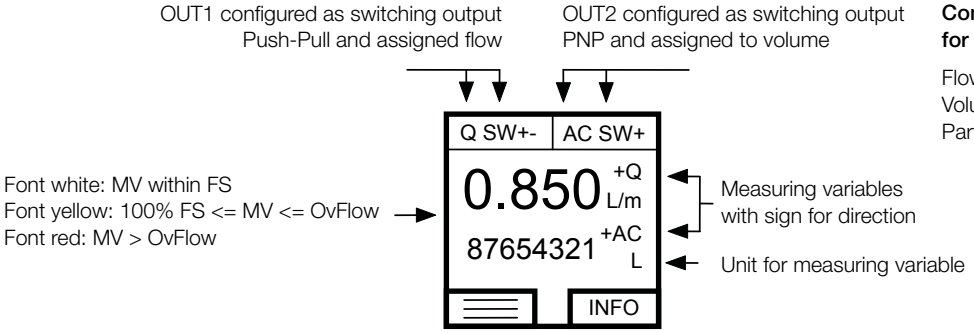

Configurable variables for both displays

Flow rate	Q
Volume	AC
Part Volume	PT